ISSN 0511-5728
The West Indian Journal of Engineering
Vol.43, No.2, January/February 2021, pp.69-76

Special Paper:

Hydraulic Model Study of Arena Dam Spillway Works, Trinidad

Harry Orville Phelps, Hazi Md. Azamathulla [a,Ψ], and Gyan S. Shrivastava [b]

Department of Civil and Environmental Engineering, Faculty of Engineering, The University of the West Indies, St Augustine, Trinidad and Tobago, West Indies

[a]Email: Hazi.Azamathulla@sta.uwi.edu; mdazmath@gmail.com;
[b]Email: shrivastava.gyan@gmail.com

[Ψ] *Corresponding Author*

(Received 18 February 2021; Accepted 23 February 2021)

Abstract: *The work reported in this paper was carried out by the first author - the late Professor Harry Orville Phelps (1929-2018) - in the Fluid Mechanics Laboratory of the Department of Civil and Environmental Engineering at The University of the West Indies at St. Augustine in 1975, when the third author assisted him as his graduate assistant. Unfortunately, this physical model study was not published in the lifetime of Professor Phelps. The third author found a copy of the report prepared in 1975, while preparing a memorial for Professor Phelps, published concurrently in the West Indian Journal of Engineering as well as the Journal of the Association of Professional Engineers of Trinidad and Tobago. Moreover, for the sake of preserving the integrity of original work, it is essentially unaltered for publication. Finally, it is hoped that its publication will add to the history of landmark hydraulic engineering structures built in Trinidad, and indeed in the Commonwealth Caribbean, and equally to Professor Phelps' legacy.*

Keywords: *Dam, Spillway, Scale-Model, Trinidad, Water Supply*

Notation:

- d_0 *- mean depth of flow at head of spillway channel*
- d_1 *- mean depth of flow at tail of spillway channel*
- *n - manning's roughness factor*
- *q - discharge per unit width*
- *u - percentage of air flow*
- *v - mean velocity of flow*
- v_a *- ritical velocity for air entrainment*
- *v* - maximum velocity in spillway channel*
- *F - Froude Number*
- *K - a constant in the equation for air entrainment – eqn. (5)*
- *L - distance of toe of hydraulic jump from upstream end of stilling basin*
- Q_p *- discharge in prototype*
- Q_m *- discharge in model*
- *R - hydraulic radius*

1. Introduction

This report relates to a hydraulic model study of the overflow structure, spillway channel and stilling basin for the Arena Dam of the Caroni-Arena Water Supply Project. Photographs 1 and 2 show the location of the Arena Dam, and its overview, respectively. The essential features of the design are shown in Figures 1 and 2.

The overflow structure, to be built of concrete, was to consist of an entrance section with a base sloping away from the spillway crest at a gradient of 1 in 9.25, and sloping sides, giving a trapezoidal section. Curved vertical walls – quadrants of a circle of radius 25ft. in plan were designed to guide the flow from the reservoir to the spillway channel. At the crest of the spillway, the flow was designed to enter the channel with a direction parallel to the axis of the channel.

The spillway crest was 50 ft. wide with a radius of curvature in the vertical plane of 62.48 ft. In order to accommodate an access road to the dam, the walls of the

Photo 1. Location of the Arena Dam, Trinidad
Source: Water and Sewerage Authority

Photo 2. An Overview of the Arena Dam (Source: Water and Sewerage Authority)

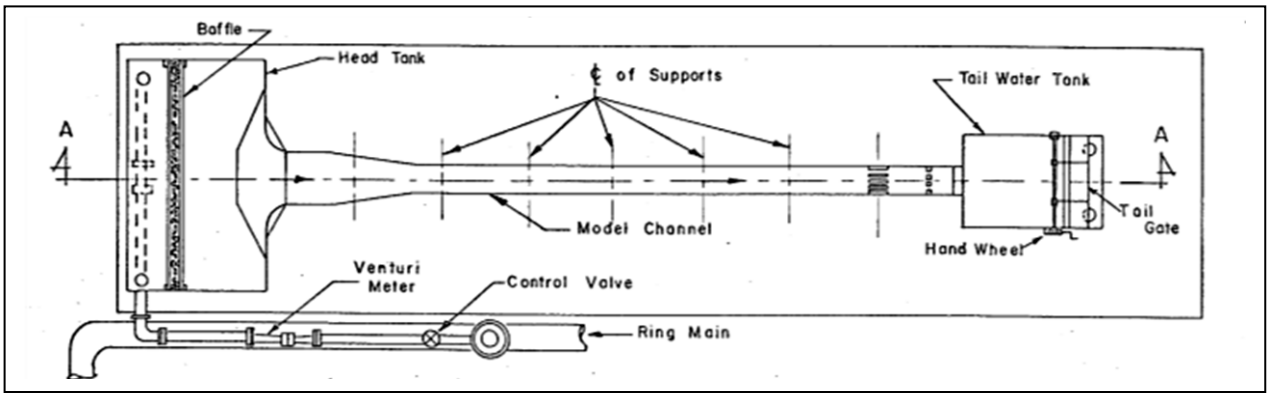

Figure 1. Layout Plan of Spillway – Caroni Arena Dam

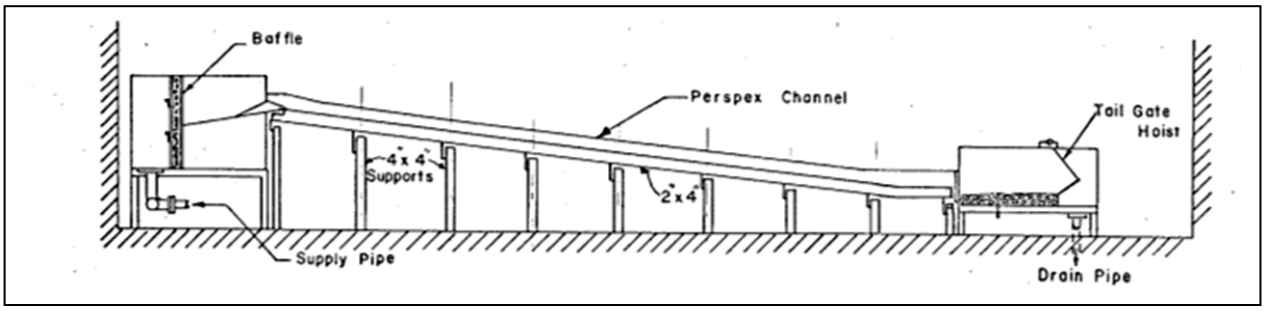

Figure 2. Layout Plan of Spillway – Caroni Arena Dam

first 25 ft. of the spillway channel were designed to act as abutments for a bridge across the channel.

These abutments were vertical and parallel to the channel axis. A converging transition channel of rectangular section joined the end of the 50 ft. wide channel emerging from the spillway crest to the main 20 ft. wide channel which was to lead to the overflow to the stilling basin. The slope of the 670 ft. long spillway channel, including the transition section, was 1 in 9.75 and ended at a horizontal stilling basin.

The high velocities anticipated at the end of the spillway necessitated inclusion of a stilling basin for dissipating energy and inducing the change from super-critical to sub-critical flow through a hydraulic jump. The basin was of conventional design being preceded by a row of 'chute' blocks at the end of the spillway channel and having a row of 'floor' blocks and a terminal sill. The retarded water would then flow down the tailwater channel to the Arena River.

The main objectives of this study are as follows:

1) To design and construct a scale model of the spillway.
2) To test the model under various flow conditions up to a comparable flow of 3,000 ft^3/s for the prototype.
3) To vary the flow conditions and configurations adequately to acquire data for evaluation of hydraulic performance of the entrance, transition, chute and stilling basin.
4) To vary the tailwater level in order to examine its effect on the stilling basin.
5) To adjust the geometric dimensions as may be required to improve performance.

2. The Model

2.1 Design Criterion

The model was constructed to a scale of 1 in 24. The choice of scale was sufficiently large to enable meaningful results to be obtained and at the same time permitted construction to a convenient size for the available space in the Hydraulics Laboratory of the Faculty of Engineering, The University of the West Indies (UWI).

In accordance with the Froude criterion for similarity between prototype and model, the scale ratios for velocity (v), discharge (Q) and Manning's roughness factor (n) were as follows:

$$\frac{v_m}{v_p} = \left(\frac{1}{24}\right)^{\frac{1}{2}} \quad (1)$$

$$\frac{Q_m}{Q_p} = \left(\frac{1}{24}\right)^{\frac{5}{2}} = \frac{1}{2821.3} \quad (2)$$

$$\frac{n_m}{n_p} = \left(\frac{1}{24}\right)^{\frac{1}{6}} = \frac{1}{1.698} \quad (3)$$

where subscripts m and p denote model and prototype respectively. Assuming a roughness factor, n = 0.015 for the concrete surface of the prototype, the required model roughness factor n_m, calculated from Equation (3), was 0.0088. Perspex (lucite) was chosen as the material for the spillway channel because its roughness factor is in the range 0.008 to 0.010 (Chow, 1959), and also because its transparency facilitated observation of the flow.

2.2 Layout and Construction

The general layout of the model is shown in Figures 1 and 2. A galvanised iron (G1) tank 10 ft x 6 ft x 4 ft high, representing the reservoir was fitted with vertical baffle, 4ft from the spillway, made up of ¾ inch gravel between two screens. Water entered the tank from the supply pipe connected to the laboratory ring main through two openings in the base of the tank, located at its corners on the far side of the baffle. The supply of water was conducted to the reservoir tank by 5 inches diameter pipe which was incorporated a control valve and Venturi Meter for flow measurement. The entrance section to the spillway was fabricated of marine plywood and painted to give a smooth impermeable surface which simulated the roughness of concrete in the prototype. Approaches to the entrance section representing the upstream face of the dam were fabricated of GI sheet attached to a frame and extended back to the baffle. The vertical approach walls were also fabricated of GI sheet.

Four perspex sections, each with flanged ends, were bolted together to the entrance section to form the spillway channel and stilling basin. The latter was provided with a base which could be easily withdrawn from the main structure to facilitate changes in the stilling basin elements.

At the downstream end the stilling basin was bolted to the tailwater tank, 6ft x 4ft x 3ft, in which the level could be adjusted by raising or lowering the tailwater gate controlled by a worm gear. Observation of the tailwater level was facilitated by a piezometer well fixed to the side of the tailwater tank and connected to the flow in the tank through a hole at its base.

Provision was made for the drainage of flow from the tailwater tank by two 5-inch diameter openings at the downstream end of the tank. These were connected to a single drain pipe by two branches, and the flow was then led to 12-inch wide flume which discharged over a weir into a weighing tank. Discharge measurements could therefore be made by three independent methods: a Venturi Meter, a sharp-crested weir and a weighing tank.

The perspex spillway channel was rigidly fixed to two 2 inch x 4 inch beams, which in turn were supported at regular intervals by pairs of vertical 4 inch x 4 inch posts. The connections between the 2 inch x 4 inch beams and the twin posts were adjustable. This arrangement provided a simple yet effective method for setting the channel on grade.

3. Measuring Techniques

3.1 Discharge

As stated previously, three independent methods for measuring discharge were employed. However, the calibrated weir and Venturi Meter were used mainly for preliminary tests and to facilitate rapid adjustments of discharge. The weighing method was the most accurate and was used for development of the calibration curve. The experimental error for equivalent prototype discharges lower than 2,000 ft^3/s was less than ± 1%, while that between discharges 2,000 ft^3/s and 3,000 ft^3/s was in the range ±1% to ± 2.5%.

3.2 Water Levels

All water levels, in the reservoir, the channel and the tailwater piezometer well – were measured with depth gauges capable of measurement to the nearest 0.01 inches (0.02 ft. in the prototype). The gauge in the

reservoir head-tank was located beyond the zone of drawdown on the spillway crest at the side of the tank. For channel measurements the gauge was supported on rails suspended across the sidewalls, while the tailwater gauge was fixed to the side of the tailwater tank.

3.3 Setting of Channel on Grade

By means of the supporting bolts, the channel could be adjusted both longitudinally and laterally. Adjustments were made with the aid of a precise Engineer's level and a steel scale with a vernier, with which measurements could be made to the nearest 0.001 inches.

4. Calibration of Spillway

The first series of calibration tests was carried out with the boundary geometry in the approaches to the spillway crest as indicated by the original design (see Figure 1).

Subsequently, in order to reduce the height of standing waves in the channel downstream, the curvature in plan of the vertical walls in the entrance section, was altered slightly to conform with an amended alignment of the transition walls (see Figure 3). The second series of tests showed that this change in boundary geometry did not have a significant effect on the calibration curve. Discharge measurement, using the weighing tank and stopwatch, were made for depths of flow over the crest in the range of 0.06 ft. to 0.20 ft. Surface tension effects were therefore negligible, given the flat curvature of the crest.

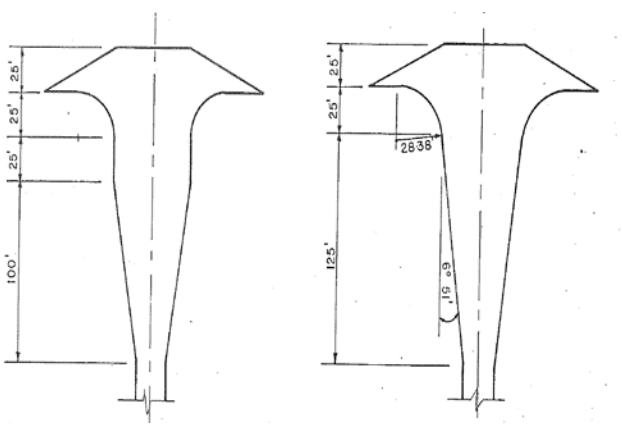

(a) (b)

Figure 3. Change in Design of Transition and Entrance Sections – (a) Original Design and (b) Amended Design

The corresponding curve shown in Figure 4, relating prototype discharge to height of reservoir level above the spillway crest was obtained by scaling up the heights and discharges in the model in accordance with the length [(1/24)] and discharge [$(1/24)^5$] scale ratios, respectively. Figure 4 also shows the reservoir water levels related to the same datum as the spillway crest which was 119.

The design discharge was given as 2,540 ft^3/s. Using the calibration curve, the corresponding water level in the reservoir of 125.55 was higher than the anticipated level of 125.4 by 0.15ft. Since the boundary layer in the entrance section of the model was relatively greater than anticipated in the prototype, the latter would have a marginally better performance.

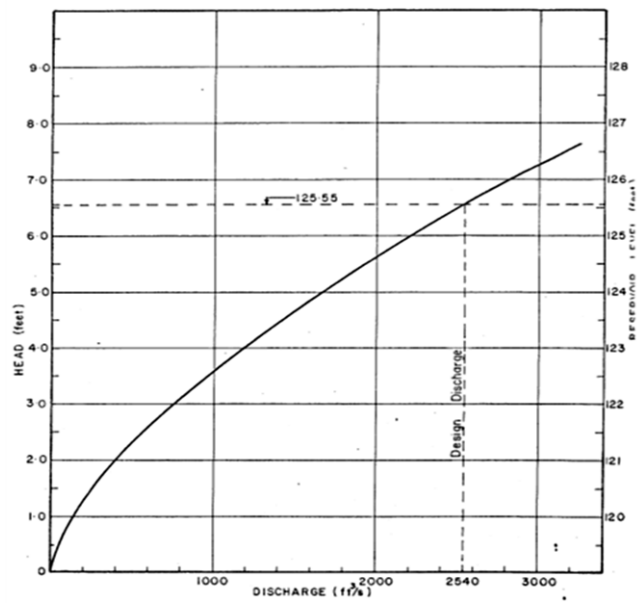

Figure 4. Calibration Curve for Spillway

5. Flow in the Transition and Main Channel

5.1 Scale Effect

Attention must be drawn to the limitations of the results obtained with the model for flow in the transition and main channel, in respect of the prediction of prototype behaviour. Significant differences are expected because of the phenomenon of air entrainment which is dependent on surface tension forces as well as velocity, hydraulic radius, channel roughness and other factors. In the model, surface tension was relatively too great, the Weber Number being greater than that in the prototype by the square of the length scale (576).

5.2 Depths and Velocities of Flow

The most important consideration was the adequacy of the height of side walls of the channel to contain the flow at all discharges. It was known that one of the major influences on maximum depth would be the standing waves generated in the transition and reflected downstream. Another reason for limiting waves is that they contribute to air entrainment which also increases flow depths. Ample provision was made in the design for reasonable freeboard in respect of mean depths of flow at maximum discharge. Particular attention was paid, therefore, to the wave patterns. For convenience, measurements are expressed in terms of the corresponding prototype values.

5.3 Flow Depths due to Standing Waves

5.3.1 Original Design

The geometry of the entrances section *t* the spillway provided a smooth stable flow into the 50 ft. wide channel immediately upstream of the transition, at all discharges. At the highest discharge (3,000 ft^3/s), small negative waves were generated immediately downstream of the spillway crest, converging towards the centre of the channel. The dominant features of the flow were the strong positive waves arising at the abrupt discontinuities in plan of the side walls at the head of the transition. These waves met on the centreline of the transition, 91 ft. downstream of the crest, the first reflection taking place at the end of the transition. Maximum depth (7 ft.) was recorded at the point of convergence of waves on the centre line after the first reflection. Thereafter, the expected attenuation of wave amplitude with successive reflections took place as the flow proceeded downstream. These results are summarised in Table 1.

Table 1. Depths due to Positive Waves at Maximum Discharge (3,000 $ft^{3/s}$)

Distance from Spillway Crest (ft.)	Depth (ft.)	
	Side	Centre Line
91	-	6.4
125	6.6	-
149	-	7.0
175	6.0	-
220	-	6.0
268	5.0	
361	4.2	
454	3.8	

Having regard to the very strong influence on wave heights, and therefore of maximum depths, of the sudden convergence of sidewalls at the beginning of the transition, elimination of this discontinuity was an obvious amendment to the design.

5.3.2 Amended Design

A second series of tests was carried out with the channel geometry altered as shown in Figure 3. The curved walls in the entrance section were made tangential to the transition wall which started at the spillway crest instead of 25 ft further downstream.

A series of small converging positive waves was generated by the sidewalls of the transition, meeting at the centreline and proceeding to the first reflection which took place at the end of the transition where a height of 5.2 ft. was recorded. The convexity of the sidewalls at this point induced a negative wave. The complete picture of the ensuing wave pattern and flow depths in the channel along the sidewalls and the centreline is given in Figure 5. The maximum flow depth, 6.2 ft., occurred 140 ft. downstream of the spillway crest. Thus, significant lowering of maximum depth was achieved. Lowering of depths of flow at wave crests became less marked further downstream.

Attempts to reduce wave heights by baffle walls in the channel, parallel to the direction of flow, were not successful. Further reduction of wave heights may be achieved by lengthening the transition.

5.4 Mean Depth and Velocities at Various Discharges

It was of interest to investigate the mean depths and velocities of flow in the spillway channel for various discharges in order to assess the degree of freeboard. Since the channel slope was greater than critical, the water surface profiles in the main channel were drawdown curves of the 52 type. For discharges less than 100 ft^3/s, however, normal depth was attained very close to the head of the channel. Table 2 shows mean depth d_0 and d_1, at the head and tail respectively, in the spillway channel relative to the discharge, are plotted relative to discharge. Also shown are the maximum velocities of flow, which vary between 54.4 ft/s at 3,000 ft^3/s and 15.6 ft/s at 100 ft^3/s.

Table 2. Flow Data - Main Spillway Channel

Q_p ($ft_{3/s}$)	d_0 (ft)	d_1 (ft)	v_* ft/s
3,000	5.70	2.76	54.4
1,000	1.58	1.44	34.7
250	0.50	0.50	25.0
100	0.32	0.32	15.6

Keys: Q_p = prototype discharge
d_0 = mean depth at level of spillway channel
d_1 = mean depth at tail of spillway channel
v_* = maximum mean velocity in channel

As mentioned previously, the values of depths and velocities obtained by scaling up from the models, and given in Table 2, would not accurately represent prototype behaviour because of the entrainment of air at higher velocities. However, there is no exact theory which can be applied to the data to account for this phenomenon. Estimates of bulking of the flow must therefore be made empirically.

5.5 Effect of Air Entrainment on Depths and Velocities

The entrainment of air in the flow of water associated with high velocities, but is also a function of surface tension, hydraulic radius and channel roughness, and takes place more readily in flows with surface waves. Its most important effects are:

1) the depth of flow is increased, and
2) the velocity of flow and therefore the momentum are reduced.

An expression proposed by Douma (Hall, 1943) may be used to estimate whether air entrainment would occur. The critical velocity v_a at which entrainment begins is given by:

$$v_a = \sqrt{5gR} \quad (4)$$

where R is the hydraulic radius

On this basis entrainment would commence in the transition for all flows.

De Lapp's formula (Hall, 1943) for estimation of the depth d_a of the water-air mixture is:

$$d_a = K^{\frac{2}{3}} \sqrt{\frac{q_w^2}{g}} \quad (5)$$

where q_w = discharge of water per unit width
K is constant

This expression is oversimplified since K is not a constant over a wide range of velocities. Having regard to the range of prototype velocities indicated by the model, a conservative estimate of the depth of the aerated flow was obtained by putting K = 0.5. Douma's Equations (1) and (2) for percentage of air entrained by volume, u, in terms of the actual velocity, v, and hydraulic radius, R:

$$u^2 = 20\,\frac{v^2}{gR} - 100 \quad (6)$$

The above Equation (6) was used to estimate the velocities of flow after calculation of depths of the air-water mixture by Equation (5). The results of these calculations are summarised in Table 3. Variations of depth with discharge are shown in Figure 5. The values apply to the tail end of the spillway channel and should be compared with the uncorrected values in Table 2.

Table 3. Depths and Velocities of Flow with Air Entrainment

Q_p (ft ^{3}/s)	d_a (ft)	v (ft/s)	%air
3,000	4.44	39.7	15.0
1,000	2.14	26.5	12.0
250	0.85	16.5	11.0
100	0.46	12.2	11.0

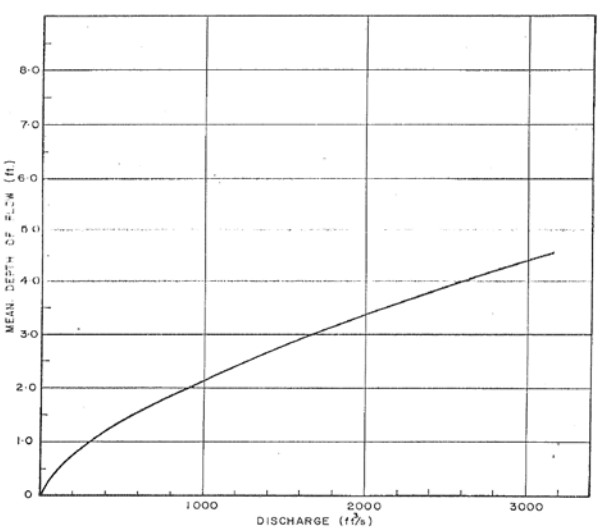

Figure 5. Estimate of Flow Depths with Air Entrainment at Tail End of Spillway Channel

6. Hydraulic Jumps and the Performance of the Stilling Basin

The hydraulic jump at the end of the spillway channel was investigated for the following prototype discharges: 3,000 ft^3/s, 1,500 ft^3/s, 250 ft^3/s, and 100 ft^3/s. Corresponding ranges of tailwater elevations were 65-70, 60-70, and 55-65, respectively.

Here again, model behaviour must be interpreted judiciously because of air entrainment in the prototype. Figure 6 shows standing waves in spillway channel, Q_p. = 3,000 ft3/s. As shown, there is likely to be a considerable reduction of momentum, as a result of the increased resistance to flow. A smaller depth of subcritical flow would therefore be required for the hydraulic jump. The conclusion may readily be drawn that for corresponding flows and tail-water levels, the hydraulic jump would occur further upstream in the prototype than in the model.

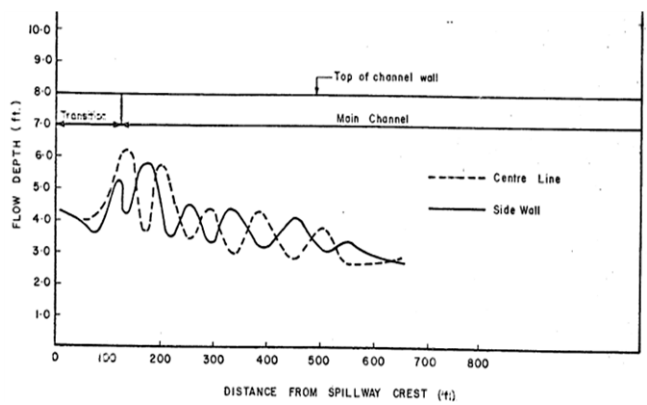

Figure 6. Standing Waves in Spillway Channel, Q_p = 3,000 ft^3/s

6.1 Experimental Results

With the exception of the highest discharge (3,000 ft^3/s) operating against the lower tailwater level, the hydraulic jump took place on the slope of the spillway channel, in some cases far upstream from the stilling basin. The distance L of the toe of the jump from the upstream end of the stilling basin was measured in each case. Results are given in Table 4.

Table 4. Position of Hydraulic Lump

Q_p (ft ^{3}/s)	Tailwater Level (ft)	L (ft)
3000	65	-8.2
3000	70	31.0
1000	65	60.9
1000	70	108.7
250	60	64.1
250	65	113.5
250	70	164.6
100	55	30.0
100	60	80.6

It is evident that in the prototype the jump would take place for all discharges within the stilling basin or further upstream on the slope. The major function of the stilling basin would therefore be fulfilled. It should be noted that the relatively lower velocities in the prototype would reduce significantly the Froude Number, *F*. In the model, *F* exceeded 5 for the three discharges: 3,000, 1,000, and 250 ft^3/s, and was only marginally less (4.87) for $Q_p = 100\ ft^3/s$.

Using the values of velocity and depth estimated for the water-air mixture in the prototype, the Froude Number would all be between 3 and 4. This is the range in which the oscillating jump occurs. An adverse property of this type of jump is the tendency for waves to travel considerable distances downstream with sufficient energy to cause damage to banks. Some mitigation of this effect might occur in the aerated flow but the possibility of such a jump occurring is a factor that should not be ignored in the design.

The design of the stilling basin appears to be deficient in respect of the freeboard allowance for these discharges close to maximum. If the tailwater level for these discharges is between 65 and 70, the surface waves produced in the hydraulic jump would result in overtopping of the sidewalls.

Another factor which should be considered is that the stilling basin is too short to contain the entire length of the jump when it occurs in the basin at high discharges and low tailwater levels. For example, at the discharge 3,000 ft^3/s the Froude Number of the supercritical flow, even allowing for an entrainment, would be close to 4 (it was over 5 in the mode). The ratio of initial to sequent depths is between 5 and 6, giving a length of jump over 60 ft. Structural design of the apron and sidewalls requires knowledge of pressure distribution under all conditions and this is determined by the water surface profiles.

7. Conclusions and Recommendations

Based on the study, several conclusions are drawn and recommendations are made, as follows.

1) Both the original and amended designs give satisfactory flow conditions in the entrance section to the spillway. Modification of the entrance geometry arises from the change in design of the transition.
2) The calibration curve for the prototype spillway obtained by scaling up the results obtained with the model indicates a reservoir level of 125.55, which is higher by 0.15 ft. than the level anticipated in the design. However, due to the thicker boundary layer in the model, a slightly better performance of the prototype is expected.
3) Differences in the relationship between discharge and height of reservoir level above the spillway crest, for the original and amended designs, are negligible.
4) The original design flow in the transition at high discharges produced a strong positive standing wave at the discontinuity in the alignment of the sidewalls, that is, at the end of the 50 feet wide section immediately downstream of the spillway crest - The wave was reflected successively at the sidewalls over the entire length of the channel downstream.
5) At a discharge corresponding to a flow of 3,000 ft^3/s in the prototype, the model indicated that a maximum depth of flow of 7 ft., due to the presence of standing waves, would occur in the main 20 feet wide channel along the centre line after the first reflection.
6) Elimination of the discontinuity by extending the transition section to the spillway crest resu1ted in a reduction of maximum depth from 7 ft. to 6.2 ft.
7) Attempts to further reduce wave heights by introduction of baffles were not successful. Two possibilities for effecting this reduction are:
   (a) lengthening the transition, and
   (b) developing a configuration of the positive wave induced in the transition by a negative wave at its downstream end.
8) Attenuation of the standing waves in the main channel was such that maximum depth at the downstream end was less than 10% greater than the mean depth.
9) Prediction of prototype behaviour from results obtained with the model, especially with respect to depths and velocities of flow and the positions of hydraulic jumps should be made judiciously because of air entrainment.
10) The major effects of entrainment of air are: (a) to increase depth flow, and (b) to reduce momentum. Estimates of the behaviour of the prototype were made by use of empirical equations developed by De Lapp and Douma (Hall, 1943).
11) By use of the empirical equations, it was estimated that the prototype flow would have between 10% and 15% of air entrained between discharges 100 ft^3/s and 3,000 ft^3/s. Taken together with the estimates of depth, the estimates of percentage air enabled calculation of velocities to be made.
12) Reduction of momentum due to the additional resistance caused by air entrainment would reduce the Froude Number at the end of the Spillway channel to valves less than 4. This in turn would cause the hydraulic jump to form further upstream than indicated by the model.
13) Attention should be given in the design to the possibility of an oscillating jump developing as a result of Froude number reduction. This type of jump causes a wave of high energy to be propagated for considerable distances downstream, suitable protective measures should therefore be considered.

14) The height of vertical sidewalls of the stilling basin is insufficient to contain the flow immediately downstream of the jump for the design discharge.
15) The stilling basin design is adequate for the promotion or hydraulic jump for all discharges, but its length is insufficient to contain the entire length of the jump at the designated discharge at tailwater levels below 70.
16) Attention should be given to the effect of water surface profiles on pressure distribution in the structural design of the apron and sidewalls of the stilling basin.

Acknowledgements:

This investigation was carried out with full cooperation of the Consultants - Trintoplan CH_2M. The support of Ronald Williams, Paddy Johnson and Eugene Winter, consulting engineers employed directly on the Caroni-Arena Pumped Storage Project is gratefully acknowledged.

References:

Chow, Vente, (1959), *Open Channel Hydraullics*, McGraw Hill, p.36, 110.

Hall, L.S., (1943), "Open channel flow at high velocities, Transactions of ASCE., Vol.108, pp.1394 (and discussion by De Lapp and Douma).

Authors' Biographical Notes:

Harry Orville Phelps (1929-2018) *is Late Professor of Hydraulic Engineering, Department of Civil and Environmental Engineering, The University of the West Indies, St. Augustine, Trinidad, West Indies. He was the first West Indian to join the newly formed Department of Civil Engineering in 1961 and retired in 1994. He came to academia after working for seven years as a Hydraulic Engineer in the Ministry of Works of the Government of Trinidad and Tobago. He was an island scholar and studied civil engineering at University of Wales, Imperial College and University of Manchester in the UK. He was a fellow, and a former past president, of the Association of Professional Engineers of Trinidad and Tobago, and of the Institution of Civil Engineers in the UK. In 2018, this journal (Volume 41, Number1) published an overview of his illustrious career.*

Hazi Md. Azamathulla *is Professor of Hydraulic Engineering, Department of Civil & Environmental Engineering, The University of the West Indies. He has authored or co-authored more than 120 peer-reviewed journal papers and 40 conference papers, four books chapters and several monographs. During 2015-2020, he served as Associate Editor for Hydrology, Journal of Pipeline Systems Engineering and Practise (2009~2013) ASCE, Geographies (2020 ~), and the IWA Journal of water supply (2010 ~ ; currently he serves on the editorial board of several other major water resources journals. Before joining the faculty of the University of the West Indies in 2018, Prof. Azamathulla served as a Postdoctoral Fellow and Associate Professor at the University Sains Malaysia, Fiji Islands, Saudi Arabia. Dr Azamathulla 's research endeavours have been ranked in the World's top 2% of scientists in a Global List released by Stanford University. He holds a Ph.D from the Indian Institute of Technology, Bombay.*

Gyan S. Shrivastava *studied Civil Engineering at Indian Institute of Technology at Delhi, Imperial College in London and at The University of the West Indies (UWI), St. Augustine. Professor Shrivastava is a Chartered Civil Engineer, a Member of the Institution of Civil Engineers in London, and a recipient of IADB and BPTT research fellowships in Engineering Hydrology. In 2006, he received a Gold Award from the Caribbean Water and Wastewater Association for his teaching, research, and public service. In 2015, he retired from the Department of Civil and Environmental Engineering at the UWI. The late Professor Phelps was his PhD supervisor.* ■